REV	SEE ECO #	APVD DATE	DWR	CHK	APVD REQ
AA	5046907	11-27-19	YYH	Y.Z	HXG

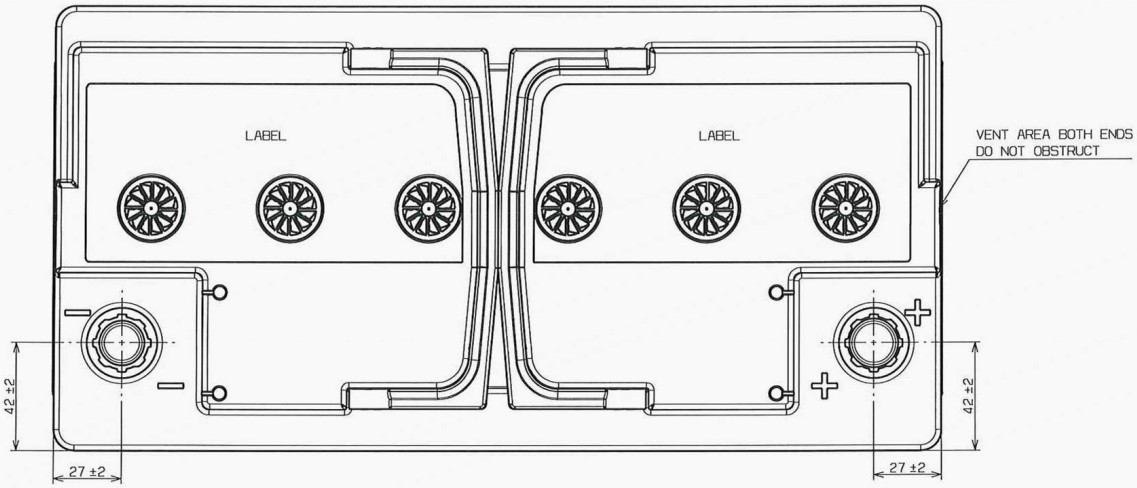

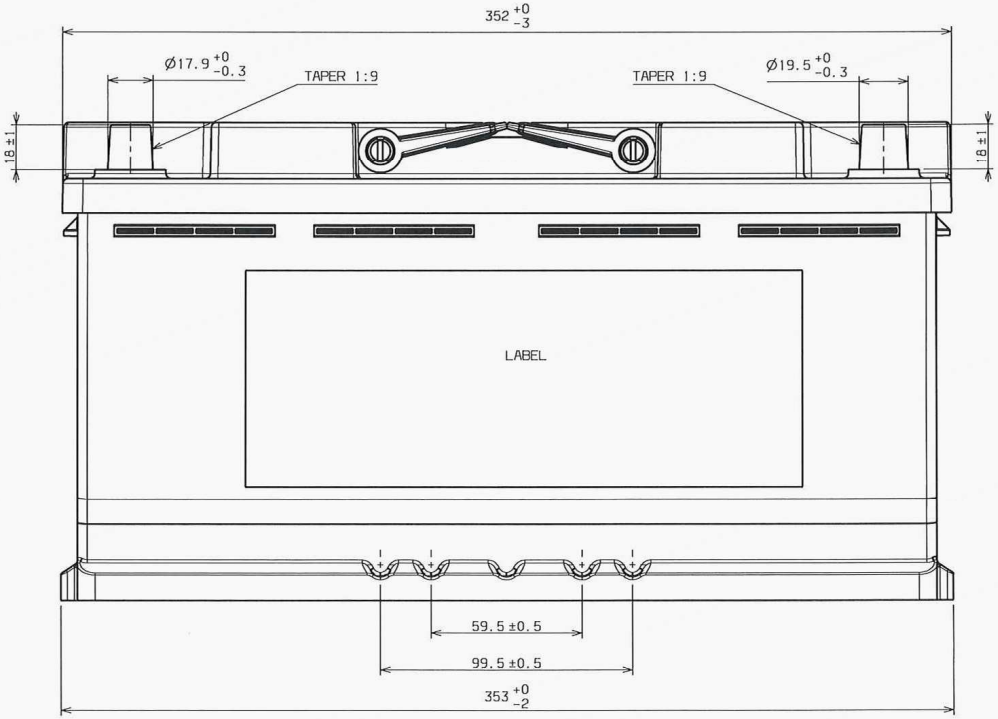

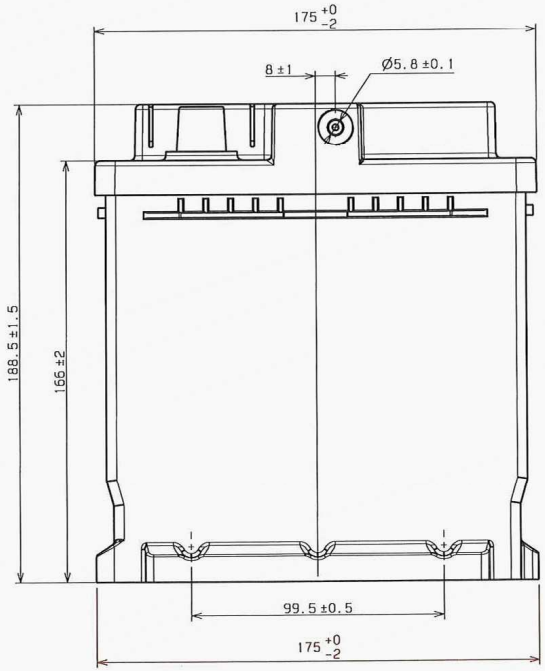

APPLICATION DATA

GROUP SIZE: AGM H8

PERFORMANCE RATINGS:	12 VOLTS
COLD CRANKING AMPERES AT -18°C	(EN)850 AMPS
20 HOUR RATE: AMP HR (REF)	92 Ah

INSTALLATION INSTRUCTIONS:
RECOMMENDED TERMINAL TORQUE SPECIFICATIONS:
TOP TERMINAL POST 5.6~7.9(N.m)
RECOMMENDED RETAINER TORQUE SPECIFICATIONS:
BASE CLAMP 15~20(N.m)
TOP BAR/FRAME 2.3~4.5 (N.m)

WITH TERMINAL PROTECTORS;
WITH ONE VENT PLUG, IT IS OPTIONAL.

KEY CRITICAL CHARACTERISTIC TO BE CHECKED AT INITIAL/ SUBSEQUENT CUSTOMER PART SUBMISSION AND MONITORED PER CONTROL PLAN

SIGNIFICANT LEVEL-1 CHARACTERISTIC TO BE CHECKED AT INITIAL/ SUBSEQUENT CUSTOMER PART SUBMISSION AND MONITORED PER CONTROL PLAN

SIGNIFICANT LEVEL-2 CHARACTERISTIC TO BE CHECKED AT INITIAL/ SUBSEQUENT CUSTOMER PART SUBMISSION (ONE TIME CAPABILITY)

DIMENSIONS AND TOLERANCES ARE FOR FINISHED PART ACCEPTANCE

RANGE											ANGLES
	OVER	0	19.05	38.1	76.2	127	203.2	304.8	457.2	609.6	
	TO	19.05	38.1	76.2	127	203.2	304.8	457.2	609.6	762	
UNLESS OTHERWISE SPECIFIED POLYPROPYLENE PART TOLERANCES ARE:		±.13	±.25	±.51	±.89	±1.40	±2.16	±3.18	±4.19	±5.33	±.5°

DIMENSIONS AND TOLERANCES ARE IN ACCORDANCE WITH ASME Y14.5M-1994

DO NOT SCALE DRAWING

THIRD ANGLE PROJECTION

DIMENSIONS ARE IN MILLIMETERS/INCHES

NOTICE: THIS DRAWING IS FURNISHED FOR REFERENCE ONLY. THE FURNISHING OR POSSESSION OF THIS DRAWING OR ANY REPRODUCTIONS THEREOF, DOES NOT CONVEY ANY MANUFACTURING RIGHTS.

Clarios CONFIDENTIAL and PROPRIETARY Information. Disclosure or use of this document or any information herein is prohibited without the express written consent of Clarios. Unauthorized export is prohibited. © Clarios. All rights reserved.

MATERIAL

CAD SYSTEM: CATIA

REF INFO: ------

TITLE: BATTERY OUTLINE AGM H8

3D MODEL NO: 30042711

ORIGINAL RELEASE AUTHORIZATION		SCALE 1/1	
DWR YYH	DATE 11-27-19	SHEET 1 OF 1	
CHK Y.Z	DATE 11-27-19		
ENGR HXG	DATE 11-27-19	SIZE D	

VERSION 00

CLARIOS

DWG NO 30129600

REV AA

D SIZE SHEET

周鑫 2019.11.29 张峰